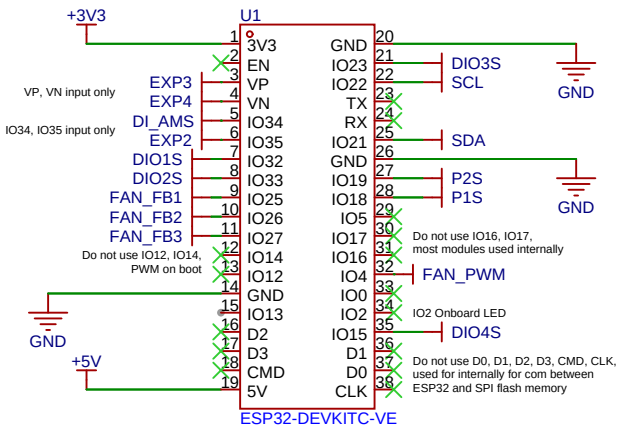

I2C Bus

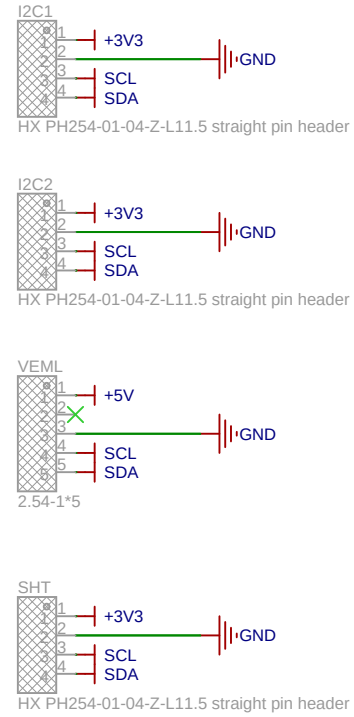

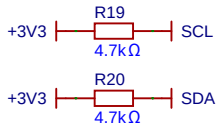

Pullup resistors:
Recommended values 2k2-3k3
4k7 to make it still work if any connected device has pullups

Schematic	Home_Automation_Device	Create at	2026-02-12
		Update at	2026-02-15
Board	Home_Automation_Device	Page	Main
Drawn	SvdM 20260214	Home_automation_device	
Reviewed	SvdM 20260214		
		Version	Size	Page 1 Total 3
EasyEDA		V1.0	A4	

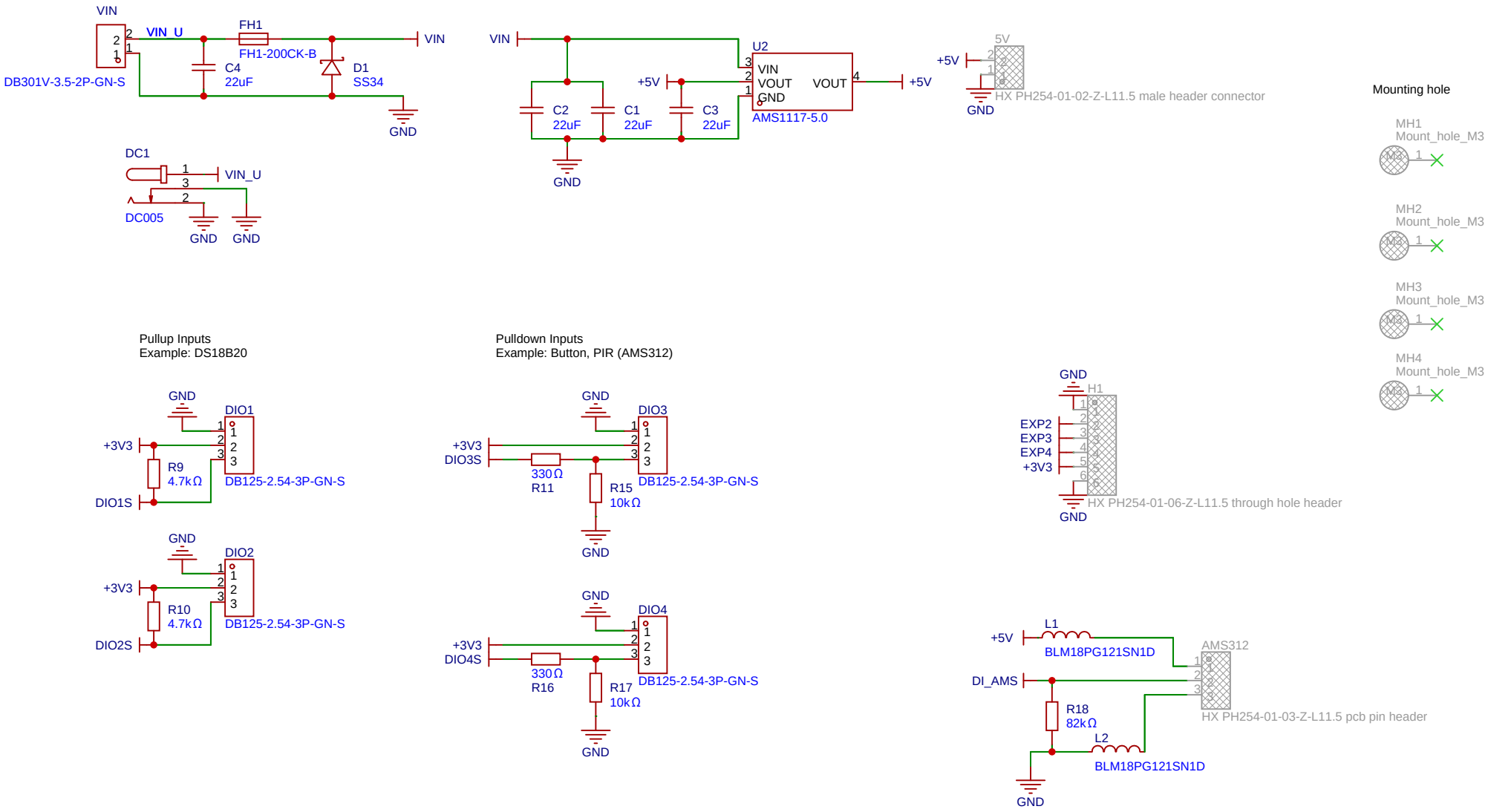

Schematic	Home_Automation_Device	Create at	2026-02-12
		Update at	2026-02-15
Board	Home_Automation_Device	Page	Input and power
Drawn	SvdM 20260214	Home_automation_device	
Reviewed	SvdM 20260214		
		Version	Size	Page 2 Total 3
EasyEDA		V1.0	A4	

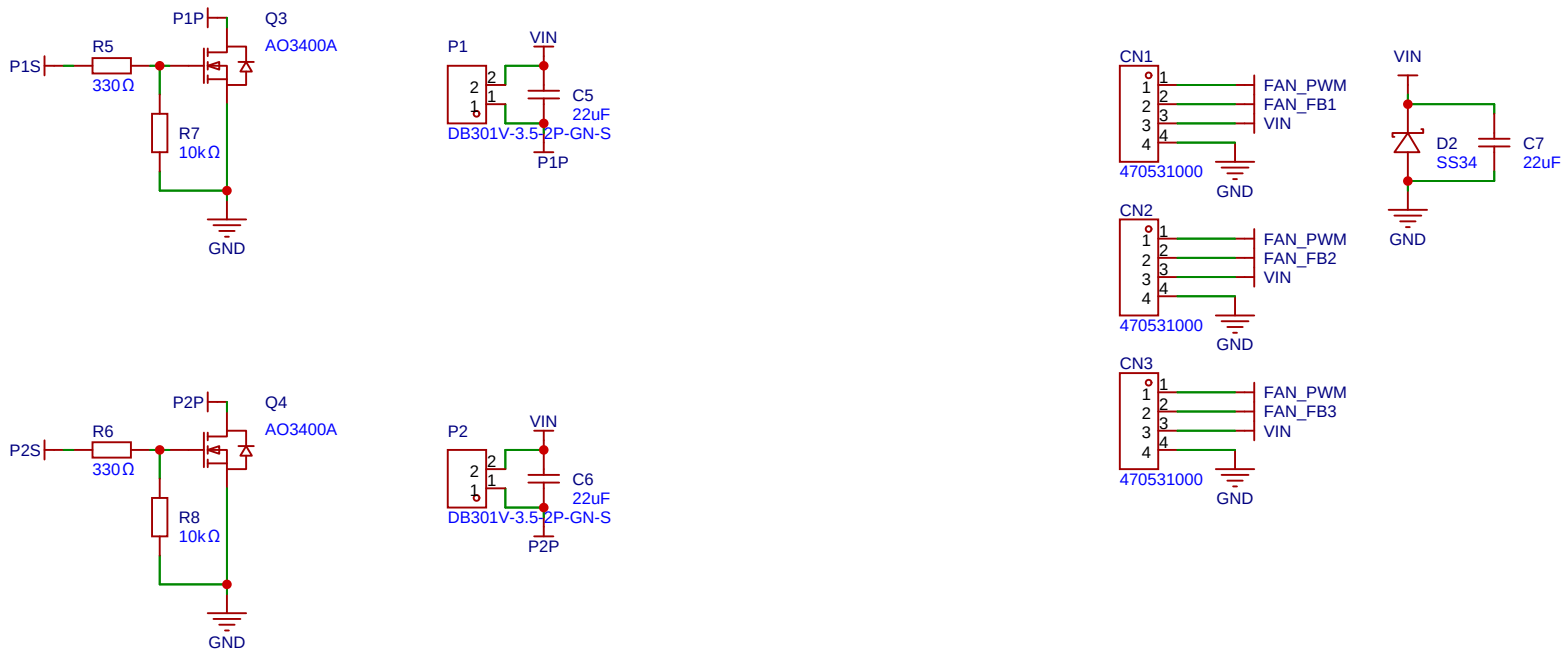

Schematic	Home_Automation_Device	Create at	2026-02-12
		Update at	2026-02-15
Board	Home_Automation_Device	Page	Outputs
Drawn	SvdM 20260214	Home_automation_device	
Reviewed	SvdM 20260214		
		Version	Size	Page 3 Total 3
EasyEDA		V1.0	A4	